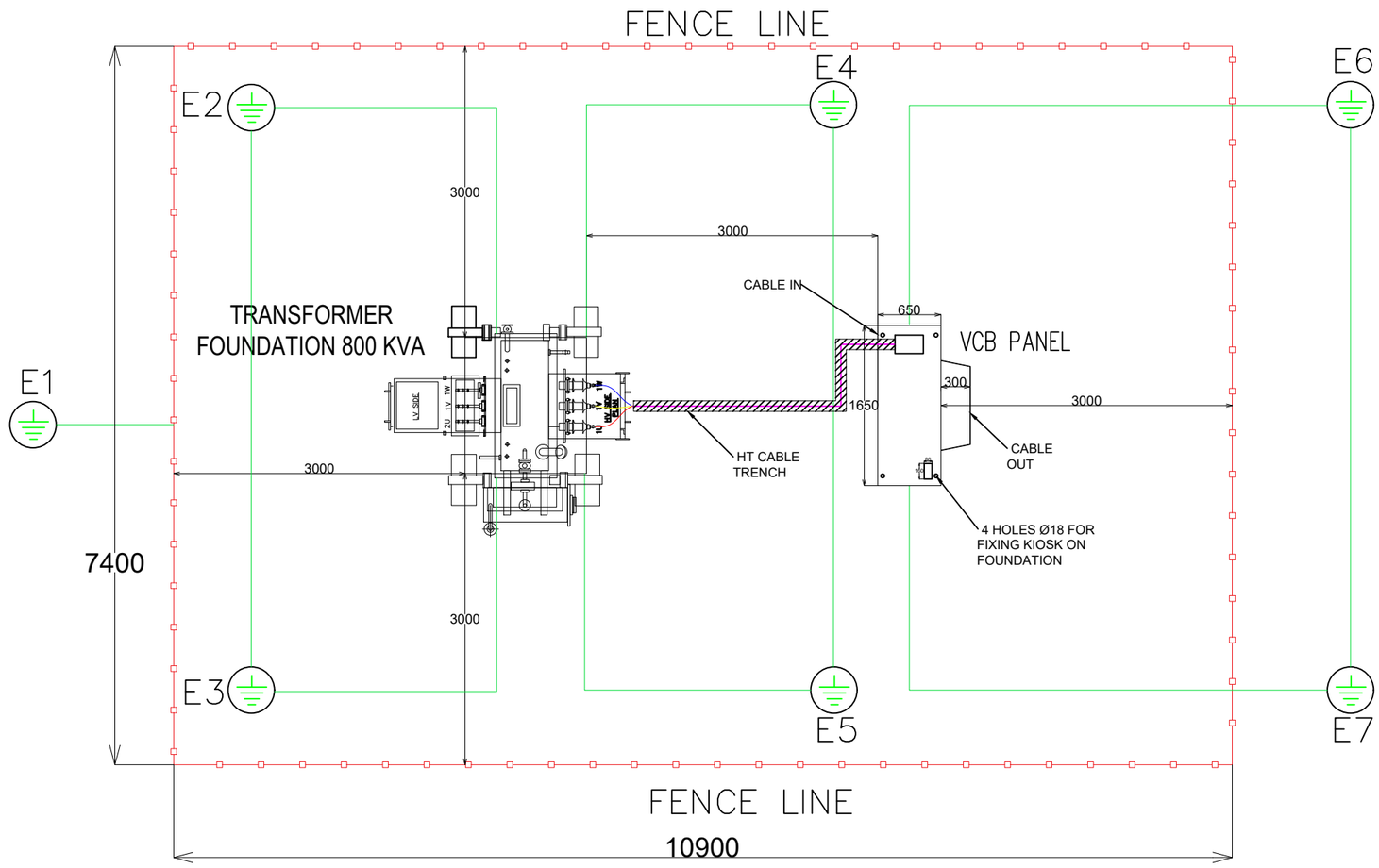

EARTHING DETAIL	
E1	FENCE EARTHING
E2,and E3	TRANSFORMER BODY EARTHING
E4 and E5	NEUTRAL EARTHING
E6 and E7	VCB EARTHING

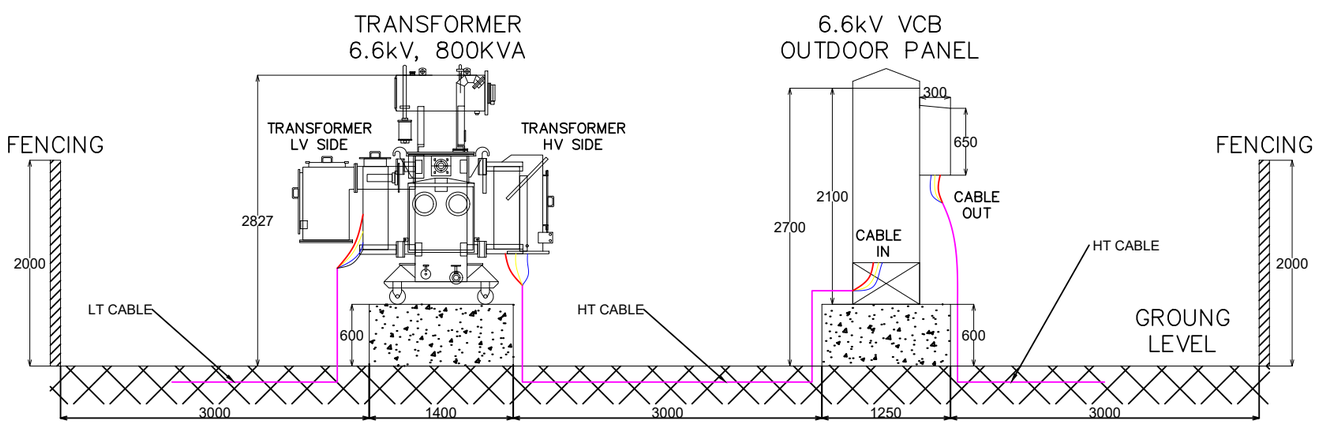

SUBSTATION PLAN

GENERAL NOTES:

ALL DIMENSIONS ARE IN MM

PROJECT DETAIL

REVISIONS

REV.	DATE	DESCRIPTIONS	PRPD. BY	CHKD. BY	APRD. BY
03					
02					
01					
00					

PROJECT:

DRAWING TITLE:

SUBSTATION LAYOUT

VENDOR

CLIENT

SCALE	SIZE	DATE	SHEET	REV.
NTS	A2	DD-MM-YYYY	1 OF 1	1